PDS
10.76
U. Mersiowsky

P851M
MicroMini

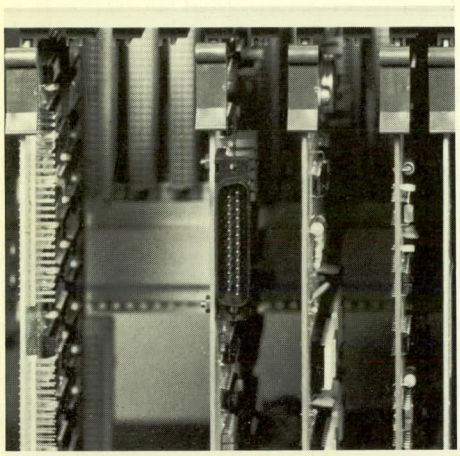

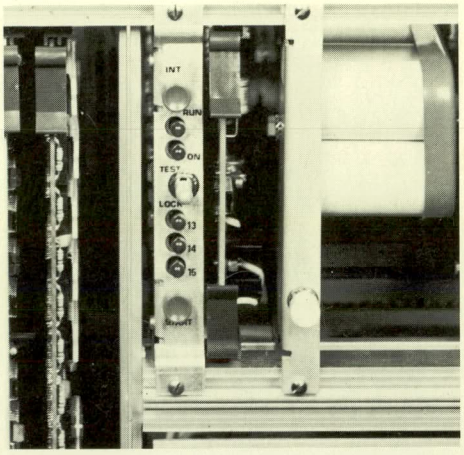

P851M Catalogue Equipment

September, 1976

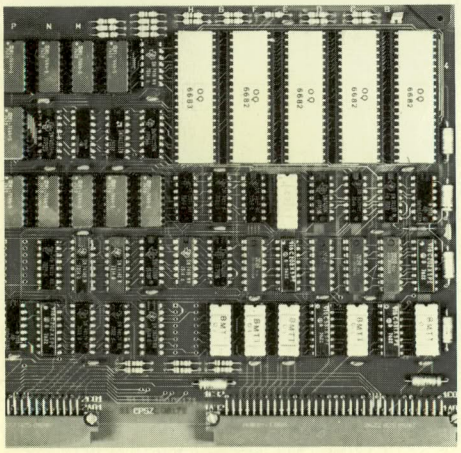



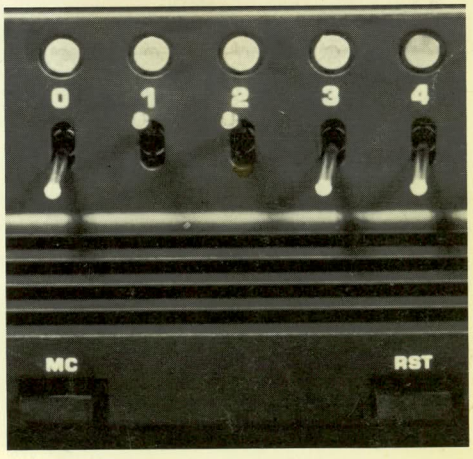

PHILIPS Data Systems

PHILIPS

INDEX

Hardware 2

P851M Central Processor 2
P851M Processor Options 3
Memory Modules 3/4
CPU Accessories 4
Controllers 5
Cards and Extenders 5
Maintenance Equipment 5

Software 6
P851M Stand Alone Software 6
P851M Basic Operating System 7
P851M Small Real Time System 8
P851M Small ROM Real Time Monitor 8
P851M Basic Real Time System 9
Read Only Memory Generation Software 10
Hardware Test programs 11

MIOS 6 12
MIOS 6 Hardware 12/13
MIOS 6 Software 14
MIOS 6 Documentation 15

P800 Program Development System 17

Appendices 18
Appendix 1 Power Supply Characteristics 18
Appendix 2 P851M chassis layout 19

HARDWARE

Type Number	Description	Prerequisites	Mounting Code	Power requirements	Notes
	P851M Central processor, includes as standard: - 16 hardware registers, 14 of which are programmable - Asynchronous general purpose bus, simplified control - P800 Standard Instruction set including Hardware Multiply/Divide - 16 priority interrupt levels - DMA facility - Microdiagnostic facility - Power Failure Automatic restart - Real time clock, line frequency - Addressing facility for up to 32k 16-bit words - Direct access (read/write) for up to 256 external registers - Minipanel - Power Supply and battery backup capability - Mounting box				
P851M-101	P851M CPU with 0.5k 16-bit words of memory, cycle time 0.75 μsec and 11 general purpose slots		6U	+5V, 2.2A(L), 0.25A(M) +10V, 0.6A	
P851M-102	P851M CPU with 1k 16-bit words of memory, cycle time 0.75 μsec and 11 general purpose slots		6U	+5V, 2.2A(L), 0.5A(M) +10V, 0.6A	
P851M-103	P851M CPU with 2k 16-bit words of memory, cycle time 0.75 μsec and 11 general purpose slots		6U	+5V, 2.2A(L), 1A(M) +10V, 0.6A	
P851M-104	P851M CPU with 4k 16-bit words of memory, cycle time 0.75 μsec and 11 general purpose slots		6U	+5V, 2.2A(L), 0.3A(M) +10V, 0.6A +12V, 0.6A(M)	
P851M-105	P851M CPU with 8k 16-bit words of memory, cycle time 0.75 μsec and 11 general purpose slots		6U	+5V, 2.2A(L), 0.3A(M) +10V, 0.6A +12V, 0.6A(M)	

Type Number	*Description*	*Prerequisites*	*Mounting Code*	*Power requirements*	*Notes*
	P851M PROCESSOR OPTIONS				
P851M-020	I/O processor. High speed multiplex data channel. Automatic control of data on cycle stealing basis. Requires 1 memory cycle per data transfer. Max. throughput 300k words/sec., 8 subchannels standard	P851M CPU	1 slot	+5V, 1A	
P851M-021	General purpose initial program loader (bootstrap)	P851M CPU board			
P851M-022	General purpose initial program loader, dedicated for ROM (bootstrap)	P851M CPU board			
P851M-032	Full Control Panel. Includes extender and cable. When ordered with the CPU it replaces the minipanel	P851M CPU	2U	+5V, 1.1A	
	MEMORY MODULES				
P851M-001	Memory module, 0.5k 16-bit words of random access memory (RAM), cycle time 0.75 μsec	P851M CPU	1 slot	+5V, 0.4A(L) +5V, 0.25A(M)	
P851M-002	Memory module, 1k 16-bit words of random access memory (RAM), cycle time 0.75 μsec	P851M CPU	1 slot	+5V, 0.4A(L) +5V, 0.5A(M)	
P851M-003	Memory module, 2k 16-bit words of random access memory (RAM), cycle time 0.75 μsec	P851M CPU	1 slot	+5V, 0.4A(L) +5V, 1.0A(M)	
P851M-004	Memory module, 4k 16-bit words of random access memory (RAM), cycle time 0.75 μsec	P851M CPU	1 slot	+5V, 0.3A(L) +5V, 0.3A(M) +12V, 0.6A(M)	
P851M-005	Memory module, 8k 16-bit words of random access memory (RAM), cycle time 0.75 μsec	P851M CPU	1 slot	+5V, 0.3A(L) +5V, 0.3A(M) +12V, 0.6A(M)	

Note The dynamic RAM modules resp. 4k and 8k, include 2 additional bits for byte parity checking.

HARDWARE

Type Number	*Description*	*Prerequisites*	*Mounting Code*	*Power requirements*	*Notes*
	MEMORY MODULES (Cont.d.)				
P851M-006	Memory,1k 16-bit words of reprogrammable read-only memory (REPROM), unprogrammed		1 slot	+5V, 0.3A(L) +12V, 0.1A(L) +12V. 0.06A(L)	1,2
P851M-007	Memory, 2k 16-bit words of reprogrammable read-only memory (REPROM), unprogrammed		1 slot	+5V, 0.3A(L) +12V, 0.2A(L) −12V, 0.12A(L)	1,2
P851M-008	Memory, 4k 16-bit words of reprogrammable read-only memory (REPROM), unprogrammed		1 slot	+5V, 0.3A(L) +12V, 0.4A(L) −12V, 0.25A(L)	1,2
P851M-029	Memory card with 24-pin sockets for a capacity up to 4k 16-bit words of REPROM. Does not include RE-PROM's		1 slot	package-dependend	
	CPU ACCESSORIES				
P851M-048	1 slot	P851M CPU	6U		
P851M-049	Central Processor cover plate, is associated with full control panel P851M-032	P851M CPU	4U		
P851M-046	Battery pack for power supply back-up during power failures. Capacity is 2 AH. Charging time is 48 hours	P851M CPU	dedicated slot		

Note 1 REPROM programming is provided on request
Note 2 Customized programmed packages will be provided through the factory at standard charge

Type Number	Description	Prerequisites	Mounting Code	Power requirements	Notes
	CONTROLLERS				
P801-140	Control unit for Paper Tape Reader P801-001 or P802-001	P851M CPU	1 slot	+5V, 0.6A(L)	3
P840-141	Control unit for Paper Tape Reader P801-001 or P802-001 and Tape Punch P803-001	P851M CPU	1 slot	+5V, 1.0A(L)	3
P845-140	Control unit for serial data transfer with interface according to CCITT recommendations V24 and V28 or current loop (TTY). Speed selectable from 110, 150, 200, 300, 600, 1200, 2400, 4800 and 9600 bits/sec. (SCUZ)	P851M CPU	1 slot	+5V, 0.8A(L) +12V, 0.025A(L) −12V, 0.045A(L)	3
P845-160	Control unit for 1 synchronous or 1 asynchronous line, full duplex or 1 half duplex connection, transmission speed selectable, Asynchronous from 110, 200, 300, 600, 1200, 2400, 4800, 9600 bits/sec.; Synchronous from 1200, 2400, 4800, 9600, 19200 bits/sec. (SALCU-Z)	P851M CPU	1 slot	+5V, 1.5A(L) +12V, 0.05A(L) −12V, 0.09A(L)	3
	CARDS AND EXTENDERS				
P843-107	Translator card to connect to the standard P800 General Purpose Bus	P851M CPU	1 slot	+5 V, 1.8A(L)	3
P843-125	General purpose card with bus control logic. Includes male connectors for bus and device connection. This card allows the design of a control unit by the customer.	P851M CPU	1 slot	+5V, 0.3A(L) design depen-dend	3
	MAINTENANCE EQUIPMENT				
P843-350	Extension board for single Eurocard. Board outside rack for testing and control.				
P843-351	Extension board for double Eurocard Board outside rack for testing and control.				
P843-352	Extension board for Power Supply regulator card.				

Note 3 Control Unit Cards are delivered without cables/connectors to connect to the devices. Standard 25 pins connectors are used, type AMP, AMPLIMITE, HDP20

SOFTWARE

Type Number	*Description*	*Core requirements*	*Notes*
	P851M STAND-ALONE SOFTWARE		
Basic package 8+8 format paper tape: PV270-010	Stand-alone Assembler	3.6	
	Papertape loader	0.4	
	Stand-alone Linkage Editor	3.4	
	I/O package on non-interrupt base	0.5	
	Stand-alone Update Package	1.8	
	For detailed description see P800M catalogue, software section		
PV270-011	Basic package on papertape on 4×4 format.		
PV265-003	ASCII core dump on I/O typewriter P841-101/105, P842-001/002 or on line printer P809-002, D.P. compatible, 8+8 format on papertape.		
	EXTENSIONS FOR STAND-ALONE SOFTWARE:		
PV271-010	Stand-alone Debugging Package in 8+8 format on papertape including facilities for: - Core image module loading and punching - Dumping of memory and register contents - Program starting, verification of memory and papertape contents - I/O and breakpoint handling - Arithmetic utilities - May run in read-only memory.		
PV271-011	Stand-alone Debugging Package in 4×4 format on papertape	2.0	

Notes Minimum configuration:
- P851M Central Processor
- 4k 16-bit words read/write memory
- I/O typewriter

The IPL-option P851M-021/022 is highly recommended to run the Standard Software

Type Number	*Description*	*Core requirements*	*Notes*
	P851M BASIC OPERATING SYSTEM		
	Paper Tape		
Basic package:	Basic Operating Monitor including I/O drivers	3.5	
	Program Loader from papertape/cassette System generator for Basic Operating Monitor	4.1	
	Assembler	3.5	
PV270-020	Linkage Editor	3.4	
	Update package	1.4	
	Debugging package	3.5	
	For detailed description see P800M catalogue, software section		
	EXTENSIONS FOR BASIC OPERATING SYSTEM		
PV270-021	FORTRAN compiler Transcoder and library	11	
PV265-003	ASCII core dump on I/O typewriter P841-101/105, P842-001/002, or on line printer P809-002, D.P. compatible, 8 + 8 format on papertape		

Notes Minimum configuration:
- P851M Central Processor
- 8k 16-bit words of read/write memory
- I/O typewriter, Papertape Reader and Punch
- For system generation 16k words of memory are mandatory
- The IPL-option P851M-021/022 is highly recommended to run the Standard Software

SOFTWARE

Type Number	*Description*	*Core requirements*	*Notes*
	P800M SMALL REAL TIME SYSTEM		
	PAPER TAPE		
Basic package:	Small Real Time Monitor including I/O drivers	0.6	
PV270-060	For detailed description see P800M catalogue, software section.		
PV271-150	Small ROM Real Time Monitor (SRRTM), basic package includes drivers and functions as Small Real Time Monitor PV270-060, 8+8 papertape format.		

Notes
- The Small Real Time Monitor is designed for use in dedicated real time applications and is upward compatible with the Basic Real Time Monitor. User programs running under the Small Real Time Monitor can be used without modifications under the Basic Real Time Monitor.
- No system generation program is necessary. The Small Real Time Monitor is always delivered in source and the needed modules can be assembled and link-edited normally. The resulting object tape has to be loaded by the Loader.
- Minimum configuration for basic package:
  P851M Central processor.
  Memory of 4k words (16 bits)
  I/O typewriter
- The Small ROM Real Time Monitor is delivered in source on papertape

Type Number	*Description*	*Core requirements*	*Notes*
	P800M BASIC REAL TIME SYSTEM		
	PAPER TAPE		
Basic package: 8+8 format	Basic Real Time Monitor including re-entrant drivers	3.5	
PV270-070	Papertape loader System Generator for Basic Real Time Monitor	4	
	For detailed description see P800M Catalogue, software section		
	EXTENSIONS FOR BASIC REAL TIME SYSTEM		
PV266-004	Real Time Full FORTRAN library		
PV265-003	ASCII-core dump on I/O typewriter P841-101/105, P842-001/002 or on Lineprinter P809-002, D.P. compatible 8+8 format on papertape.		

Notes
- Minimum configuration:
- P851M Central Processor
- 4k 16-bit words of read/write memory
- I/O typewriter
- Papertape Reader and Punch
- For system generation 16k words are mandatory
- The Basic Real Time Monitor is designed as a runtime executive system, capable of handling real time events and a variable number of programs in a multitasking environment
- The Basic Real Time Monitor includes all functions of the Small Real Time Monitor and is expanded with more monitor request and I/O facilities. Each program, which runs under the Small Real Time Monitor, can run under the Basic Real Time Monitor.
- The Basic Real Time Monitor is also compatible with the Basic Operating System in such a way, that a program developed under the Basic Operating Monitor, can run under the Basic Real Time System without any modifications.
- FORTRAN programs have the possibility of using the facilities of the Real Time FORTRAN library, which enables easy writing of real time programs.
- The IPL-option P851M-021/022 is highly recommended to run the Standard Software.

SOFTWARE

Type Number	*Description*	*Core requirements*	*Notes*
	READ-ONLY MEMORY GENERATION SOFTWARE		
PV271-160	ROM Image Stand Alone Software including: - Stand Alone utility routines to convert load modules into punch tape as input for a ROM Programmer DATA I/O. - Paper tape on 4×4 format.		
PV271-161	ROM Image Stand-alone Software - Stand-Alone utility routines for ROM Programmer DATA I/O, paper tape media on 8+8 format.		
PV271-162	ROM Image under DOS including: - Utility routines running under the Disc Operating System to generate the input for the ROM Programmer DATA I/O.		
PV271-163	ROM Image under DOS on cassette		

Note Details on the hardware of the ROM Programmer DATA I/O are available on request.

Type Number	*Description*	*Memory requirement*	*Prerequisite Notes*	*Test progr. name*
PV251-220	P851M Basic test package for the CPU, including: - Test program on the instruction set - Test program on random access memory (RAM)	8k (RAM) 8k (RAM)	1,3 1,3	
PV251-200	Basic test package for papertape equipment, includes: - Test Program for Papertape Reader P801-001 or P802-001 via P801-140 or P840-141. (with reference test tape) - Test program for Papertape Punch P803-001 or Facit 4060 via P840-141	4k (RAM) 4k (RAM)	1,2,3 1,2,3	
PV251-201	Testprogram for serial interface V24 or current loop interface on typewriter equipment, character printer or TTY ASR via P845-140.	4k (RAM)	1,2,3	

Prerequisite Notes:
1 To test the P851M Central Processor, the P851M-021 option IPL (bootstrap) is required
2 The Full control panel P851M-032 is required
3 The test program input device P801-001 or P802-001 Papertape Reader is required.

Type Number	Description	Prerequisites	Mounting Code	Power requirements	Notes
	MIOS 6 EXTENSION AND INTERFACE CARDS				
PC1701/00	MIOS 6 EXPAnder (EXPA/Z) This module translates the General Purpose (GP) bus to the General Purpose bus simplified (GPBS) for connection of a P852M, P856M, P857M minicomputer with a MIOS 6 chassis. Also required for expansion of a P851M System beyond one rack. Includes the GP bus, cable length 2 meters.	PC1780 or PC1781 or PC1782	1 slot	+5V, 1.0A	4
	DIGITAL INPUT, OUTPUT AND EXERCISER CARDS				
PC1710/00	MIOS 5 Input Card Digital (MIC/D) for 32-bit input with HNIL or TTL specification. Input cable to be connected at the connector side (rear side of chassis).	P851M or PC1783	1 slot	+5V, 0.7A (+15V, 0.8A)	5,6,7
PC1711/00	MIOS 6 Isolated Input Card Digital (MIIC/D) for 32-bit input with opto-coupler isolation and display facility. Input cables to be mounted at the front side.	P851M or PC1783 and PC1770/00	1 slot	+5V, 0.8A	6
PC1715/00	MIOS 6 Input Output Card Digital (MIOC/D) for 16 input bits and 16 output bits. The input and output bits have HNIL or TTL specification. Input and output cable to be connected at the connector side (rear side of chassis).	P851M or PC1783	1 slot	+5V, 0.7A (+15V, 0.2A)	5,6,7
PC1716/00	MIOS 6 Isolated Input Output Card Digital (MIIOC/D) for 16 input and 16 output bits. The input and output lines have opto-coupler isolation and every bit status can be displayed at the front of the card using the display facility. Input and output cable to be mounted at the front side.	P851M or PC1783 and PC1770 and/or PC1771	1 slot	+5V, 0.8A	6
PC1720/00	MIOS 6 Output Card Digital (MOC/D) for 32-bit outputs with HNIL or TTL specification. Output cable to be connected at the connector side (rear side of chassis).	P851M or PC1783	1 slot	+5V, 0.7A (+15V, 0.3A)	5,6,7
PC1721/00	MIOS 6 Isolated Output Module Digital (MIOM/D) for 32-bit output with opto-coupler isolation and display facility. Output cables to be mounted at the front side.	P851M or PC1783 and PC1771	1 slot	+5V, 0.8A	6
	MIOS 6 CABLES USER SIDE				
PC1730/00	Digital MIOS Exerciser Card (DMEC) with front panel with switches and display to exercise the digital part of MIOS 6.	Digital MIOS 6	1 slot	+5V, 0.8A −15V, 0.06A	8
PC1770/00	Digital Input Isolated Cable (DIIC) to be used for typenumbers PC1711 and PC1721 (input connector). Includes cable connector for card connection, the other end is open ended. Length 2 meters.	PC1711 or PC1721	–	–	10
PC1771/00	Digital Isolated Output Cable (DIOC) to be used for typenumbers PC1731 and PC1721 (output connector). Includes cable connector for card connection, the other end is open ended. Length 2 meters.	PC1721 or PC1731	–	–	10

Type Number	Description	Prerequisites	Mounting Code	Power requirements	Notes
	MIOS 6 EXTENSION RACKS				
PC1780/00	MIOS 6 EXtension RAck I (EXRAI). Chassis 6U high with GPBS mother board and necessary connectors for up to 26 modules.	–	Rack 6U	–	
PC1781/00	MIOS 6 EXtension RAck II (EXRAII). Same as PC 1780 but for maximum 13 slots at double distance.	–	Rack 6U	–	
PC1782/00	MIOS 6 EXtension RAck III (EXRAIII) Same as PC1780 but for 13 slots at normal distance. Right half of rack free for power supplies and/or MIOS industrial interfaces.	–	Rack 6U	–	
PC1783/00	MIOS 6 EXtension RAck IV (EXRAIV) Chassis 6U high with GPBS mother board and 13 connectors for modules. Includes sufficient power to drive up to 13 MIOS modules. Includes the EXPA/Z (PC1701).	–	Rack 6U	–	11

with Power supply!

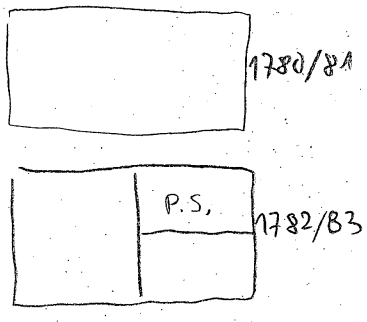

Type Number	*Description*	*Core requirements*	*Notes*
PC2701/00	MIOS 6 Software drivers for: - Digital inputs on programmed channel and I/O processor - Digital outputs on programmed channel and I/O processor Suitable for BOM, SRTM, BRTM.		13
	TEST SOFTWARE		
PC2703/00	MIOS 6 TEST software package for: - Digital inputs - Digital outputs The test program requires the MIOS EXERCISER PC1730/00 and special tools		13
PC2704/00	MIOS Exerciser support software. This software can be used in debugging MIOS 6 installations. Digital inputs and outputs can be put in predefined state. It makes use of the MIOS exerciser PC1730/00, suitable to be used under BOM, SRTM and BRTM.		13

Note 4 When MIOS 6 has to be connected to a P852M, P856M or P857M this card is mandatory.
Note 5 No standard cable available
Note 6 Under prerequisites only the P851M chassis and the PC1783 extension chassis are mentioned. It is also possible to use a PC1780, PC1781 or PC1782 with PC1701 for mounting this card.
Note 7 Value between brackets in power requirements column is only valid for HNIL specification. Not needed when card is used for TTL levels.
Note 8 1 slot used for connector. Because of front panel and components on card 2 slots space is needed.
Note 10 Cables include AMP connector to be mounted at the front side of MIOS 6 module has to be soldered on the distributor.
Note 11 This extension rack is equipped with sufficient power to drive 13 MIOS modules of all possible mixtures.
Note 13 Software will normally be delivered on papertape. On special request cassette or PROM versions can be delivered.

DOCUMENTATION

1. The **MIOS 6 Configurator**
   This booklet contains all information to select the proper MIOS 6 components for a particular configuration.

2. The **MIOS 6 Application Handbook**
   This handbook describes the MIOS 6 possibilities extensively and gives all technical information to put MIOS 6 installations in operation (hardware and softwarewise).

3. **Service Documentation**
   For every MIOS 6 module, a service document is available and can be ordered referring to the typenumber of the module of which service documentation is required.

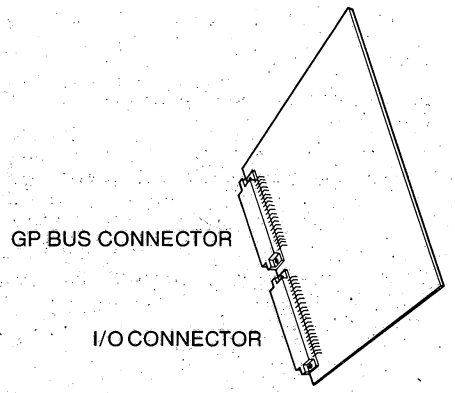

LAYOUT OF THE PC 1710, PC 1715, PC 1720
DIGITAL MIOS CARDS

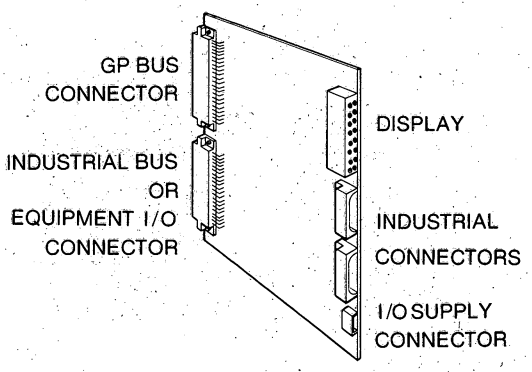

LAY-OUT OF THE PC 1711, PC 1716, PC 1721
DIGITAL MIOS CARDS.

MIOS 6 CARD LAYOUT

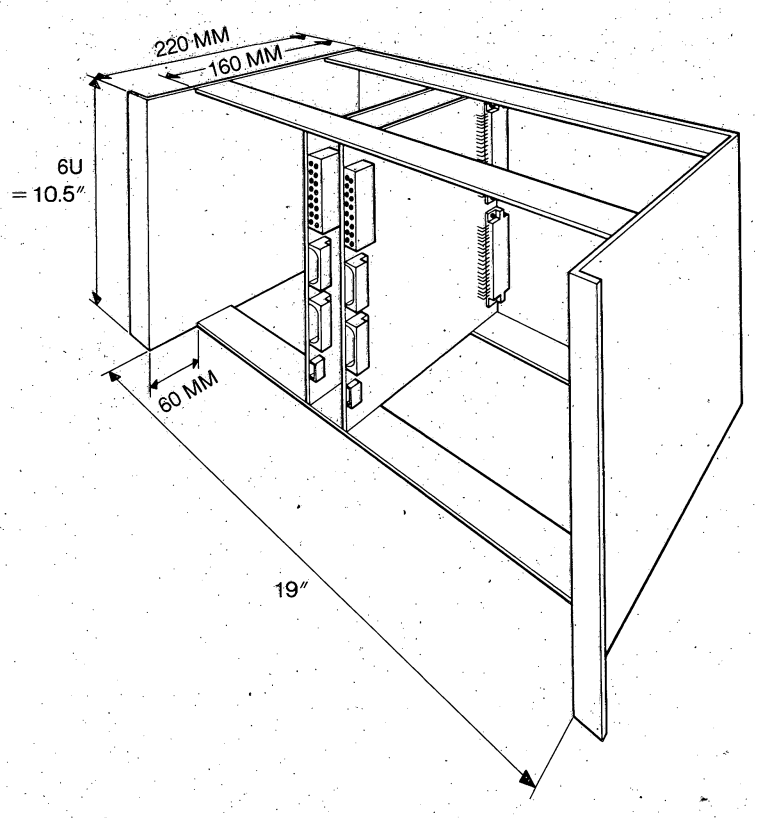

MIOS 6 IN A RACK

P800M PROGRAM DEVELOPMENT SYSTEM

SYSTEM

P856-451	Basic System consisting of:	
	P856M-403	CPU + 16k memory (1.2 μsec) and 8 GP slots
	P843-020	I/O Processor
	P840-003	Control Unit for Line Printer, Card Reader
	P824-040	Control Unit for Disc
	P824-002	Disc Drive
	P824-100	Disc Cartridge
	P849-217	19″ Cabinet with Mounting for Disc
	PV262-012	High Speed Fortran Compiler
	PV270-040	Disc Operating System

SYSTEM OPTIONS

	System Option consisting of:	
	P856M-406	CPU + 16k memory (0.7 μsec) with 8 GP slots in place of P856M-403
	P856M-032	Extended Control Panel

PERIPHERAL OPTIONS (See P800M catalogue for other peripherals)

P840-001	Multiple CU for P801-001 (PTR) and P803-001 (PTP)
P801-001	Papertape reader (PTR) 333 ch/sec
P803-001	Papertape punch (PTP) 75 ch/sec
P809-002	Line printer 200 lpm, 132 columns
P824-002	Moving head disc 2 × 2.7M characters
P833-152	CU/CRC for up to 2 P833-001 Cassette drives with
P833-001	Cassette tape drive unit 7.5 ips, 800 bpi
P842-001	Character printer plus keyboard 50 ch/sec, 110 columns, V24 interface
P818-002	Display with keyboard, V24 interface

APPENDIX 1

Power Supply Characteristics

	+5V(L)	+10V(L)	+12V(L)	−12V(L)	+5V(M)	+12V(M)
P.S.U.	13	0.6	0.6	0.5	1.2	0.9
CPU	1.5	0.6				
0.5k RAM Static	0.4				0.25	
1 k RAM Static	0.4				0.5	
2 k RAM Static	0.4				1	
4 k RAM Dynamic	0.4				0.26	0.56
4 k RAM Dynamic with parity	0.55				0.3	0.63
8 k RAM Dynamic	0.4				0.26	0.56
8 k RAM Dynamic with parity	0.55				0.3	0.63
1 k REPROM	0.31		0.1	0.06		
2 k REPROM	0.31		0.2	0.12		
4 k REPROM	0.31		0.4	0.25		
Minipanel	0.3					
Full Control Panel	1.1					

Note Values of power supply requirements are in Ampère.

P851M Basic Chassis Layout

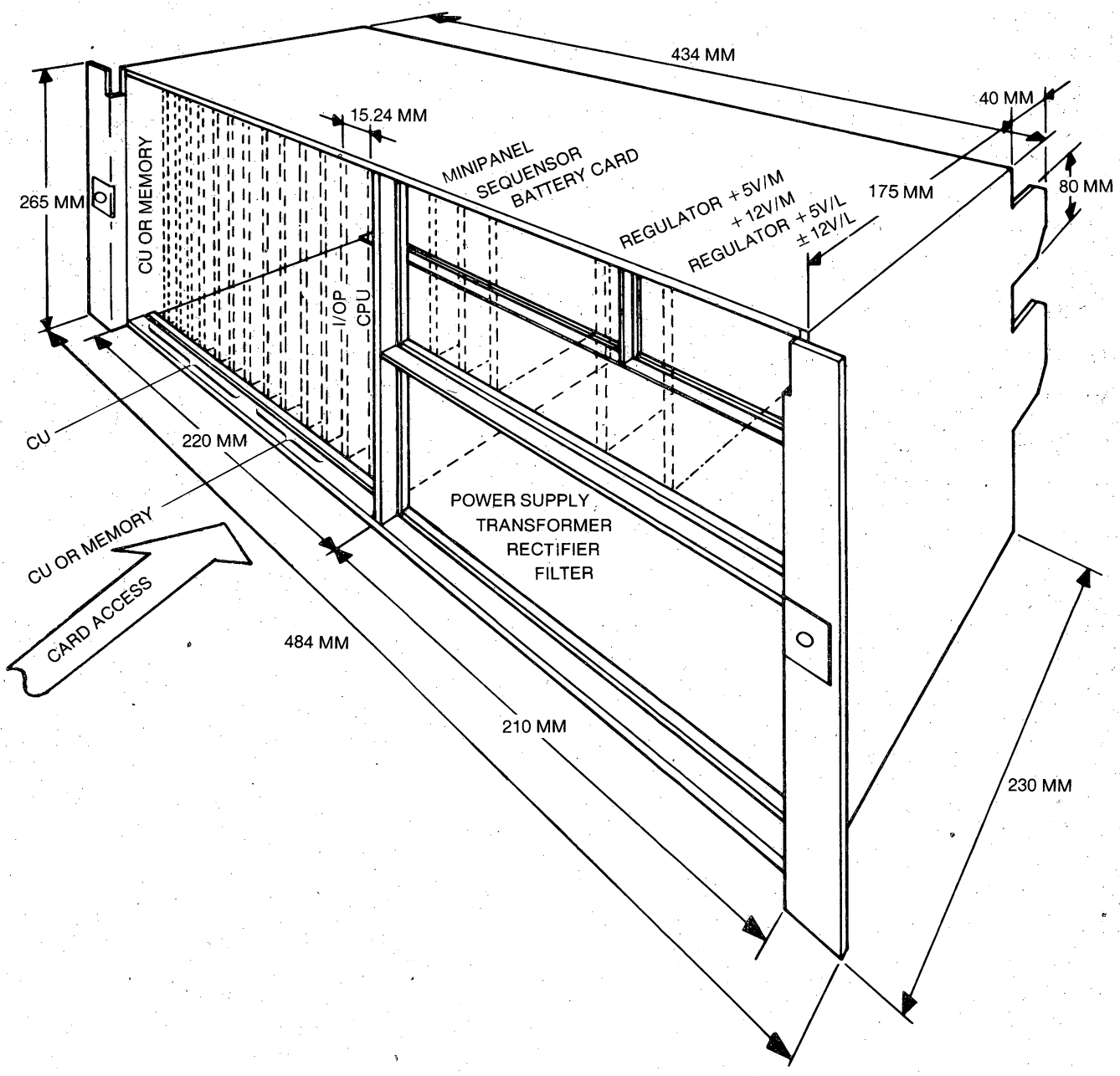

Note: Card size 160 × 233.4 mm

PHILIPS DATA SYSTEMS B.V.

MARKETING GROUP SMALL COMPUTERS
P.O. Box 245, Apeldoorn, The Netherlands
Phone: 055-230123; telex: 49142

For further details contact the above address or:

EUROPE

Sweden
Svenska AB Philips
Data Systems
Minidatorer
Rissneleden 16
Fack
172 07 Sundbyberg
Tel. 08 830300.

Denmark
Philips Data Systems A/S
Prags Boulevard 80
2300 København S
Tel. 0127 2222

Norway
Norsk A/S Philips
Data Systems Division
Nils Hansens vei 2
Oslo 6
Tel. 02 679380

Finland
OY Philips AB
Department Data Systems
Kaivokatu 8
P.O. Box 10255
Helsinki 10
Tel. 90 17271

Belgium
Philips Data Systems SA
Marketing Group Small Computers
Anspachlaan 1
1000 Brussel
Tel. 02 2193900

France
Philips Data Systems
Département Mini-ordinateurs
5 Square Max-Hymans
75015 Paris 15
Tel. 01 734 7759

Western Germany
Philips GmbH-Eiserfeld
Bereich Prozessrechner
Münsterstrasse 330
4 Düsseldorf 30
Tel. 0211 632087

Höhenstrasse 17
7012 Fellbach bei Stuttgart
Tel. 0711 523086
523088

Austria
Österreichische Philips GmbH
Industrie Elektronik
Breitenfurterstrasse 219
1230 Wien
Tel. 0222 831501

Italy
Philips S.p.A.
Sezione S and I
Viale Elvezia 2
20052 Monza
Tel. 039 361441

Switzerland
Philips AG
Data Systems
Binzstrasse 18
8027 Zürich
Tel. 01 442211

Great Britain
Philips Data Systems
Elektra House
2 Bergholt Road
Colchester
C04-5AA Essex
Tel. 206 5115

The Netherlands
Philips Data Systems Nederland B.V.
Bordewijkstraat 4
Rijswijk (Z-H)
Tel. 070 906720

Spain
Philips Ibérica S.A.E.
Grupo Instrumentación
Martinez Villergas 2
Madrid 27
Tel. 091 4042200

FAR EAST

Japan
Nihon Philips Corporation
P.O. Box 13
World Trade Centre
Hamamatsu-cho, Minato-ku
Tokyo 105
Tel. 03 435 5211

NORTH AMERICA

U.S.A.
North American Philips Corp.
Dept. 007
100 East 42nd Street
New York N.Y. 10017
Tel. 212 697 3600

Canada
Philips Electronics Industries Ltd.
Telecommunication Division
1001, Ellesmere Road
Scarborough 706
Ontario
Tel. 416 7521980

Publication number: 5122 991 27951

Philips Data Systems B.V. reserves the right to make any necessary changes in the contents of this publication without prior notice. The policy of the company is one of continuous improvement.

© by Philips Data Systems B.V.

September 1976

Printed in The Netherlands.